Sealant	Winnebago Part #
A	131264-05-02A
B	131264-03-01A
C	072889-10-000
D	131264-04-02A
E	094401-04-000

Note: Sealant E may be substituted for sealant C in painted locations.

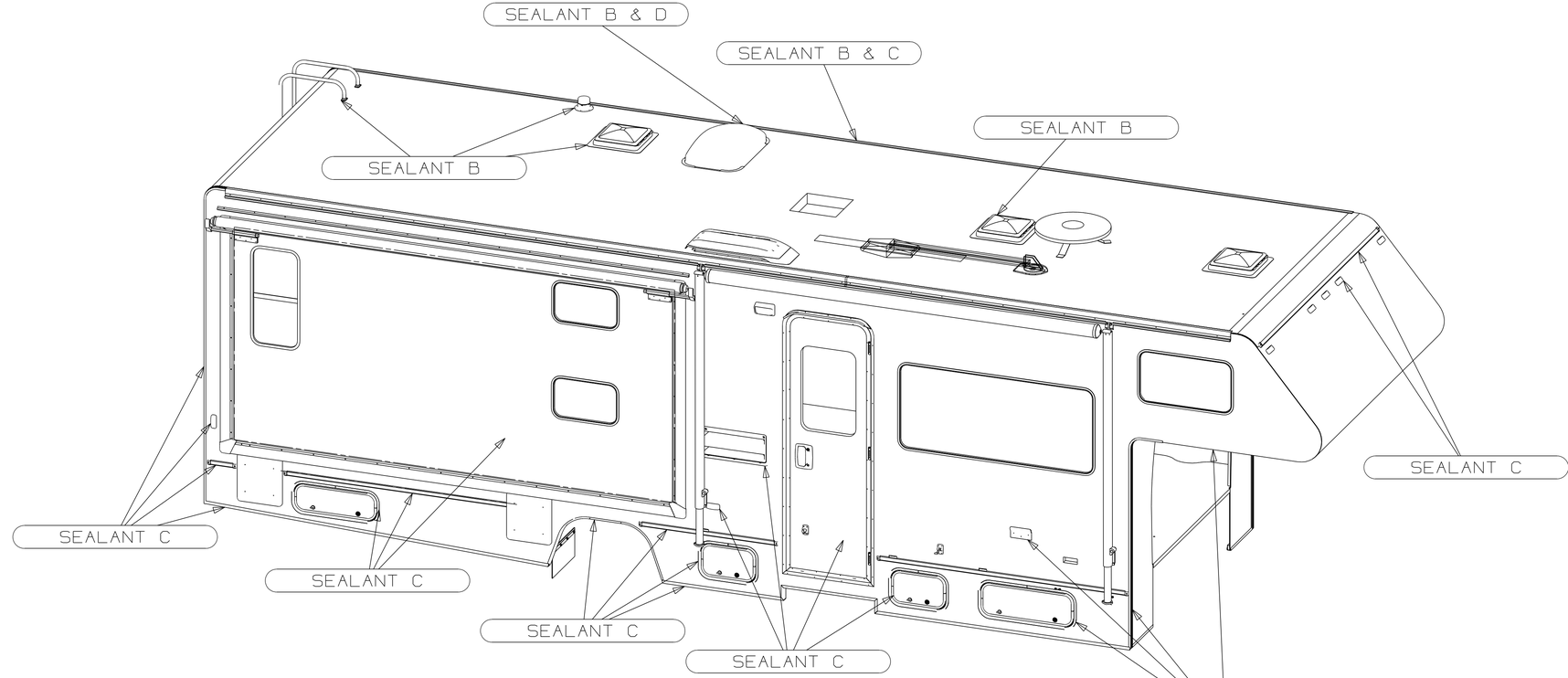

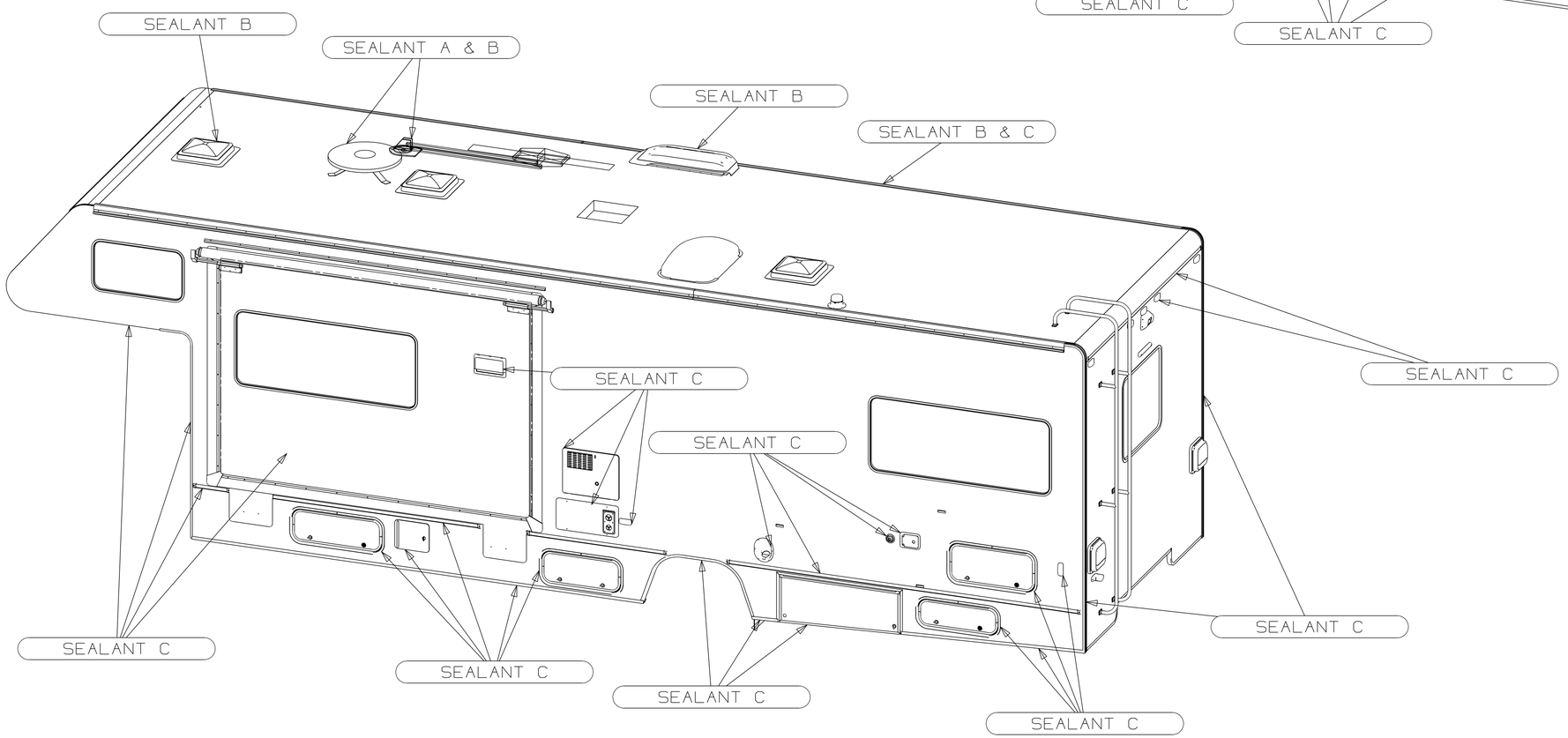

2010 ITASCA IMPULSE/WINNEBAGO ACCESS 231J SEALANT CALL-OUT SHEET