RELEASE	REV A	DATE	DFTR	ADM	DWG NO 141598

REV	ZONE	REVISION RECORD	DATE	DFTR-ORIG

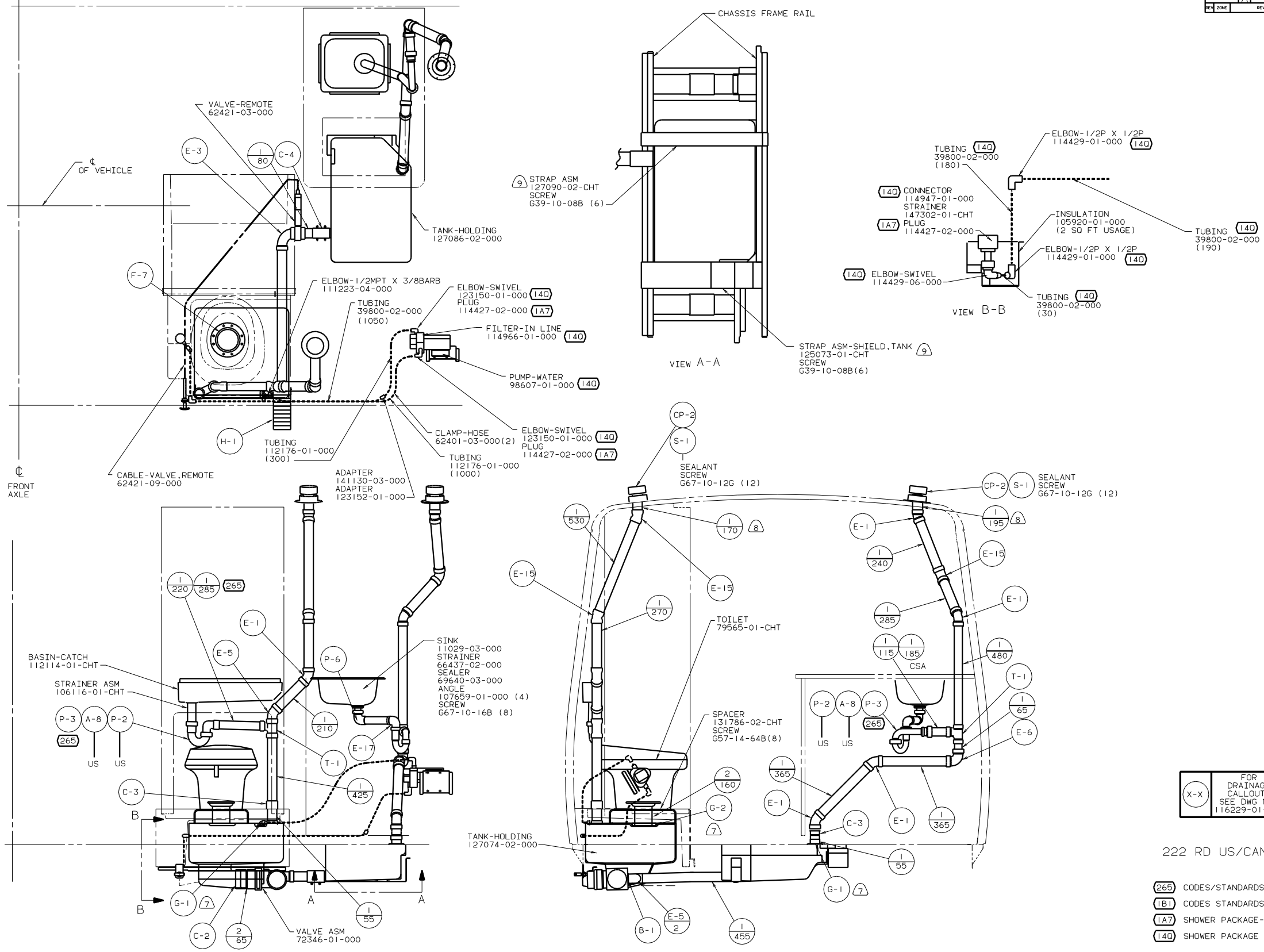

X-X	FOR DRAINAGE CALLOUTS SEE DWG NO. 116229-01-000

222 RD US/CANADIAN

265 CODES/STANDARDS-CSA/CMVSS
1B1 CODES STANDARDS/USA
1A7 SHOWER PACKAGE-WITHOUT
140 SHOWER PACKAGE

NOTES:

5. EXPOSED PIPE ABOVE ROOF TO BE PAINTED 37163-01-000.
4. ALL EXTERIOR OPENINGS AROUND PIPE TO BE SEALED WITH 69637-01-000.
3. ALL PIPE AND FITTINGS TO BE ASSEMBLED WITH SOLVENT 4020-01-000.
2. SLOPE OF TRAP ARM MUST BE 6 PER 305.
1. SLOPE OF HORIZONTAL PIPING TO BE 6 PER 305 MIN.

9 USE SCRAP CLOSED CELL NEOPRENE FROM 77075-01,-02 OR -03 ON HAT CHANNELS FOR VIBRATION DAMPENING.

8 VENT PIPE MUST PROJECT 51 MIN AND 63.5 MAX ABOVE ROOF FOR PROPER FIT AND FUNCTION.

7 SEE DWG 61607-01-000 FOR INSTALLATION OF GROMMET.

6. FOR CAN UNITS EACH HOLDING TANK SHALL HAVE A CSA APPROVAL STAMPED NEAR THE IAMPO APPROVAL.

10. SECURE PIPES TO CABINET USING WIRE TIE 108046-02-000 AND SCREW G67-10-12U (8).

COPYRIGHT 2003 WINNEBAGO INDUSTRIES, INC.

WINNEBAGO. 03 2220D

DFTR	DATE	UNSPECIFIED TOLERANCES ARE:	MATERIAL:
CHKR	DATE	WHOLE DIM (X) ± 3	
P E	DATE	ONE-PLACE (X.X) ±	
M E	DATE	TWO-PLACE (X.XX) ±	
DSNR	DATE	ANGLE ±	
		THIRD ANGLE PROJECTION	

LAYOUT NO 200GEN

TITLE: DRAINAGE SYSTEM INSTL

DIA Ø | SCALE: NONE | DO NOT SCALE DRAWING | SIZE IE | DWG NO 141598

ALL DIMENSIONS ARE IN MILLIMETERS | SHEET 1 OF 1

REF: 131308 G | 08/11/03

RELEASE	REV A	DATE	DFTR	ADM	DWG NO 141140

REV	ZONE	REVISION RECORD	DATE	DFTR-ORIG

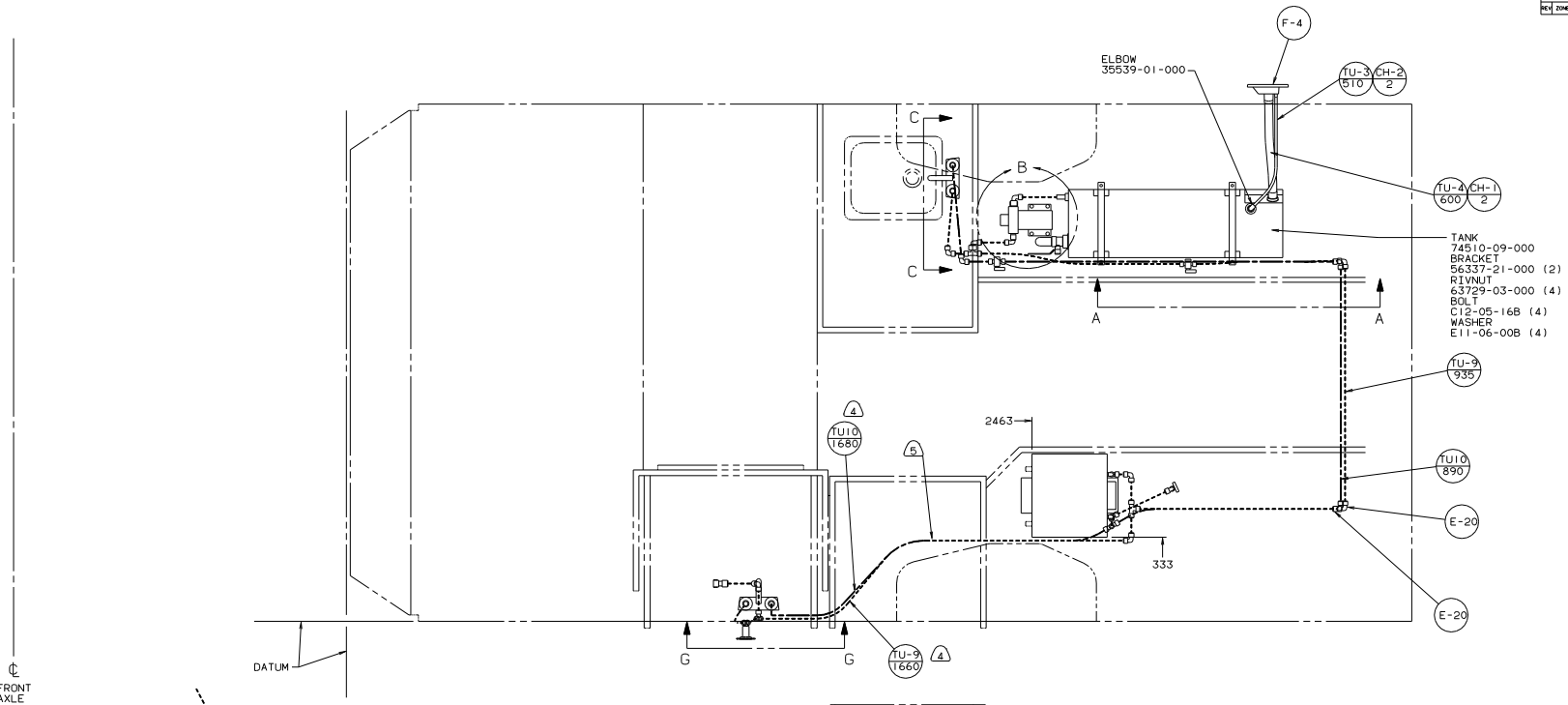

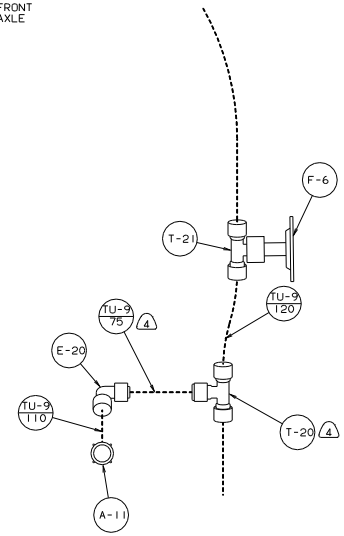

VIEW D-D

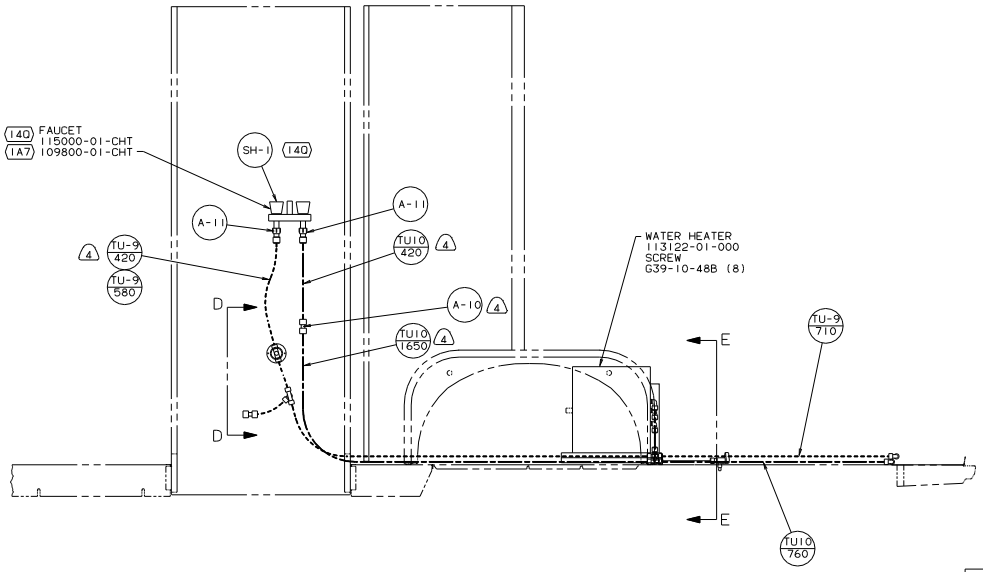

64R EXTERIOR WASH STATION

1A7 SHOWER PACKAGE-WITHOUT

140 SHOWER PACKAGE

4. NOT REQUIRED WITH EXTERIOR SHOWER.

3. ALL TUBING TO BE SECURED AT 1200 INTERVALS MAXIMUM WITH CLAMP 10495-01-000 OR CLIP 91951-01-000 AND SCREW G67-10-12B.

2. TUBING TO BE INSTALLED WITH SUFFICIENT SLOPE TO PROVIDE DRAINAGE TO NEAREST VALVE.

1. PLASTIC FITTINGS TO BE SEALED WITH SEALANT 84456-01-000.

NOTES:

6. TRIMARK "KEY ONE"
KEY:P/N 138288-01 THRU -10
WATER FILL: P/N 138637-53-000 THRU -009.

5. WRAP WATER LINES WITH INSULATION 105290-01-000 ANY PLACE THEY ARE IN CONTACT WITH MOTOR AID LINES. FASTEN WITH WIRE TIES.

X-X	FOR WATER CALLOUTS SEE DWG NO. 116230-01-000

LEGEND	
HOT	———
COLD	- - - - -

WINNEBAGO. 03 2220D

DFTR	DATE	UNSPECIFIED TOLERANCES ARE: WHOLE DIM (X) ± .7; ONE-PLACE (X.X) ±; TWO-PLACE (X.XX) ±; ANGLE ±; THIRD ANGLE PROJECTION; MATERIAL:
CHKR	DATE	
P E	DATE	
M E	DATE	
DSNR	DATE	

LAYOUT NO 2220D | TITLE: WATER SYSTEM INSTL

DIA Ø | SCALE: NONE | DO NOT SCALE DRAWING | SIZE I | DWG NO 141140

ALL DIMENSIONS ARE IN MILLIMETERS | SHEET 1 OF 2

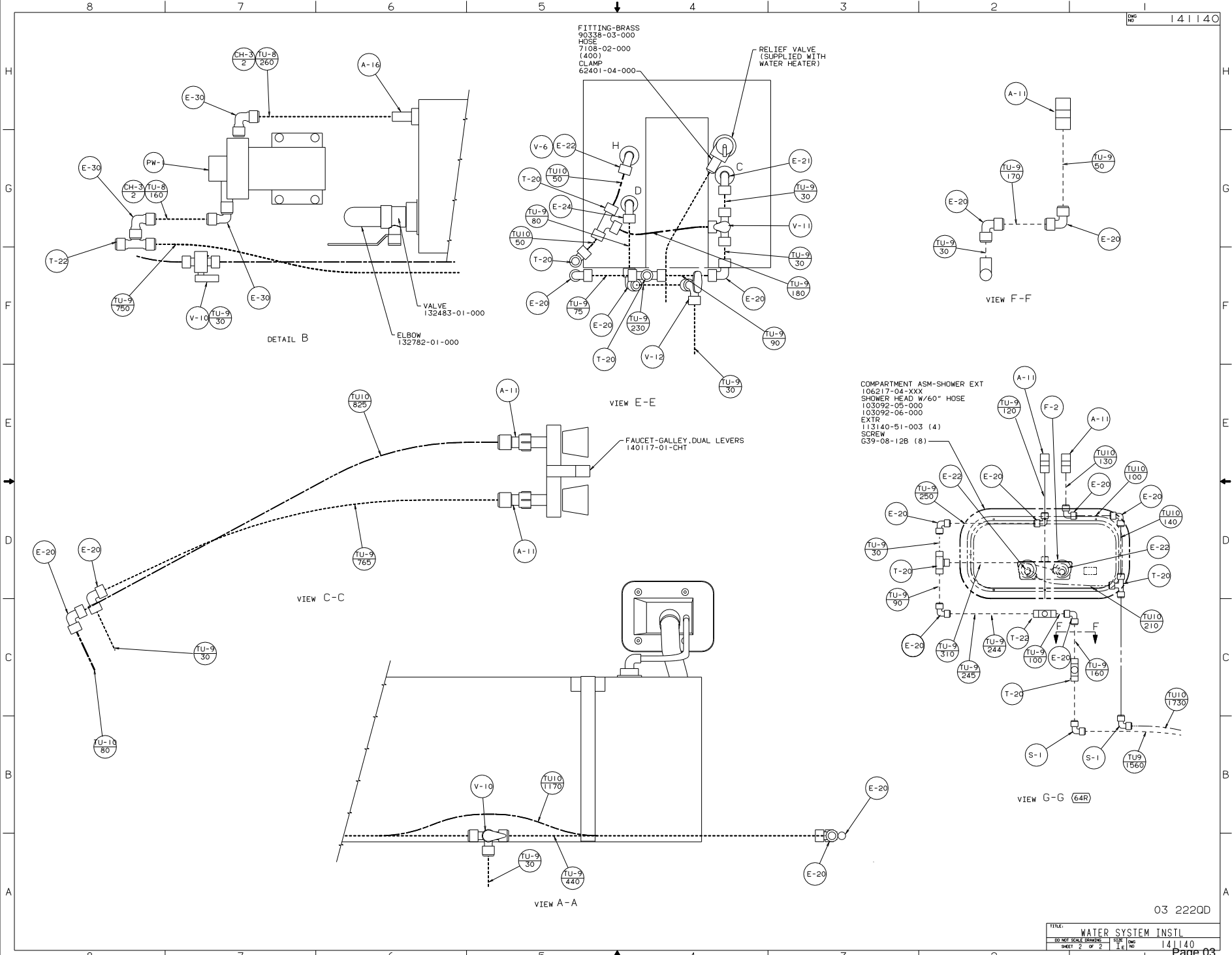
DWG NO 141140
FITTING-BRASS
90338-03-000
HOSE
7108-02-000
(400)
CLAMP
62401-04-000
RELIEF VALVE
(SUPPLIED WITH
WATER HEATER)
CH-3 2
TU-8 260
A-16
E-30
PW-
CH-3 2
TU-8 160
T-22
TU-9 750
V-10
TU-9 30
E-30
VALVE
132483-01-000
ELBOW
132782-01-000
DETAIL B
V-6
E-22
H
TU10 50
T-20
D
E-24
TU-9 80
TU10 50
T-20
E-20
TU-9 75
E-20
TU-9 230
T-20
V-12
TU-9 30
E-21
C
TU-9 30
V-11
TU-9 30
TU-9 180
E-20
TU-9 90
VIEW E-E
A-11
TU-9 50
TU-9 170
E-20
E-20
TU-9 30
VIEW F-F
TU10 825
A-11
FAUCET-GALLEY,DUAL LEVERS
140117-01-CHT
TU-9 765
A-11
E-20
E-20
TU-9 30
TU-10 80
VIEW C-C
COMPARTMENT ASM-SHOWER EXT
106217-04-XXX
SHOWER HEAD W/60" HOSE
103092-05-000
103092-06-000
EXTR
113140-51-003 (4)
SCREW
G39-08-12B (8)
A-11
TU-9 120
F-2
A-11
TU10 130
TU10 100
E-22
E-20
E-20
E-20
TU-9 250
E-20
TU10 140
TU-9 30
E-22
T-20
T-20
TU-9 90
TU10 210
E-20
TU-9 310
TU-9 244
T-22
F
F
TU-9 100
E-20
TU-9 160
TU-9 245
T-20
TU10 1730
S-1
S-1
TU9 1560
VIEW G-G 64R
V-10
TU10 1170
E-20
TU-9 30
TU-9 440
E-20
VIEW A-A
03 222QD
TITLE:
WATER SYSTEM INSTL
DO NOT SCALE DRAWING
SHEET 2 OF 2
SIZE E
DWG NO 141140
03/31/04