RELEASE	REV A	DATE	DFTR	ADM	DWG NO 132302

REV	ZONE	REVISION RECORD	DATE	DFTR-ORIG

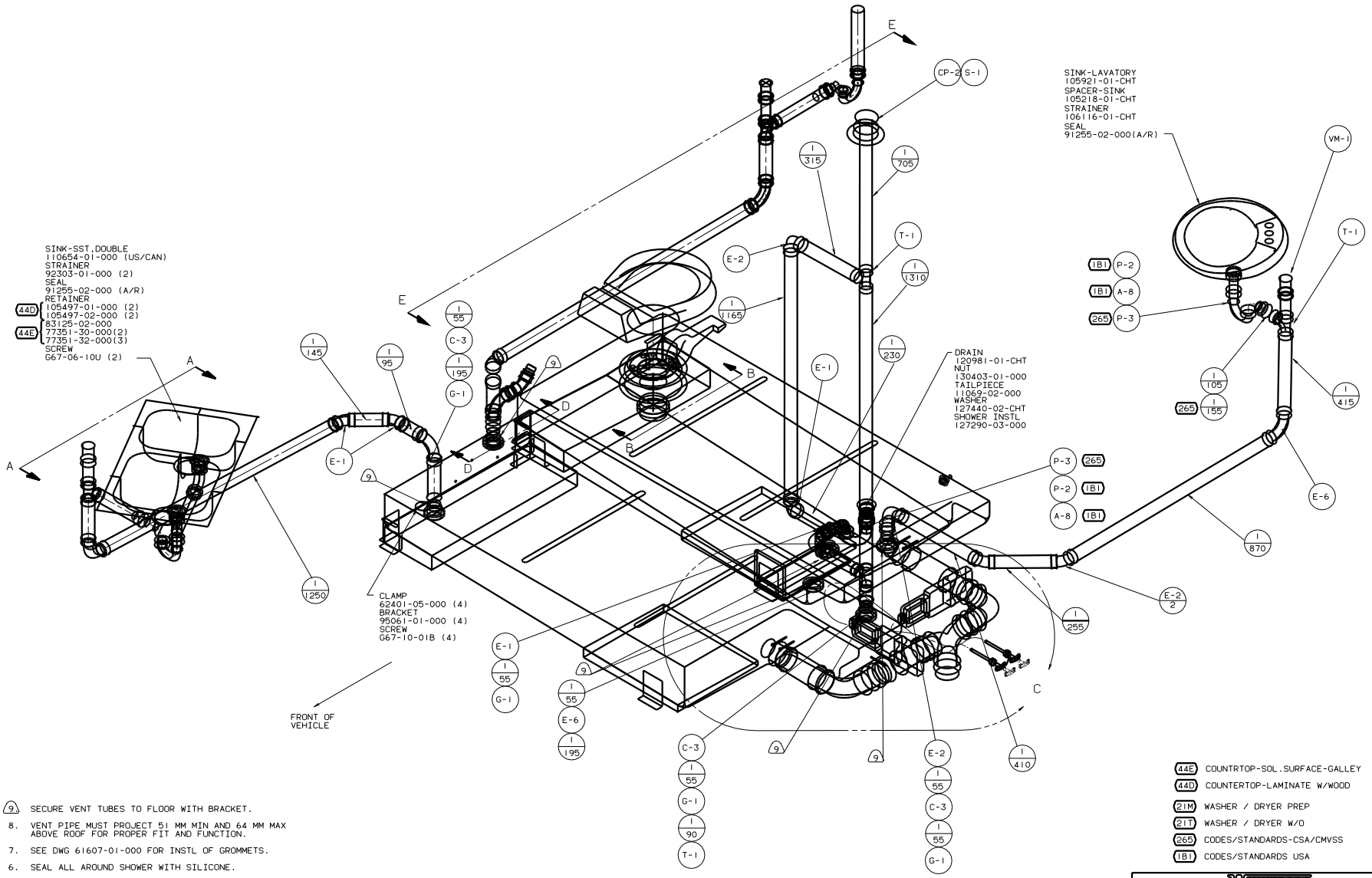

9. SECURE VENT TUBES TO FLOOR WITH BRACKET.

8. VENT PIPE MUST PROJECT 51 MM MIN AND 64 MM MAX ABOVE ROOF FOR PROPER FIT AND FUNCTION.

7. SEE DWG 61607-01-000 FOR INSTL OF GROMMETS.

6. SEAL ALL AROUND SHOWER WITH SILICONE.

5. EXPOSED PIPE ABOVE ROOF TO BE PAINTED WITH 37163-01-000.

4. ALL EXTERIOR OPENINGS AROUND PIPE TO BE SEALED WITH 11074-01-000.

3. ALL PIPE AND FITTINGS TO BE ASSEMBLED WITH SOLVENT 4020-01-000.

2. SLOPE OF TRAP ARM MUST BE 6 PER 305.

1. SLOPE OF HORIZONTAL PIPING TO BE 6 PER 305 MIN.

NOTES:

44E COUNTRTOP-SOL.SURFACE-GALLEY

44D COUNTERTOP-LAMINATE W/WOOD

21M WASHER / DRYER PREP

21T WASHER / DRYER W/O

265 CODES/STANDARDS-CSA/CMVSS

1B1 CODES/STANDARDS USA

X-X FOR DRAINAGE CALLOUTS SEE DWG NO. 116229-01-000

WINNEBAGO 00 G37G

DFTR	DATE	UNSPECIFIED TOLERANCES ARE: WHOLE DIM (X) ± 7; ONE-PLACE (X.X) ±; TWO-PLACE (X.XX) ±; ANGLE ±; THIRD ANGLE PROJECTION	MATERIAL:
CHKR	DATE		
P E	DATE		
M E	DATE		
DSNR	DATE		

LAYOUT NO G37G — TITLE: DRAINAGE SYSTEM INSTL

DIA Ø | SCALE: NONE | DO NOT SCALE DRAWING | SIZE I | DWG NO 132302

ALL DIMENSIONS ARE IN MILLIMETERS | SHEET 1 OF 4

REF: 129732 L 1

Copyright 2005 Winnebago Industries, Inc.

DWG NO 132302

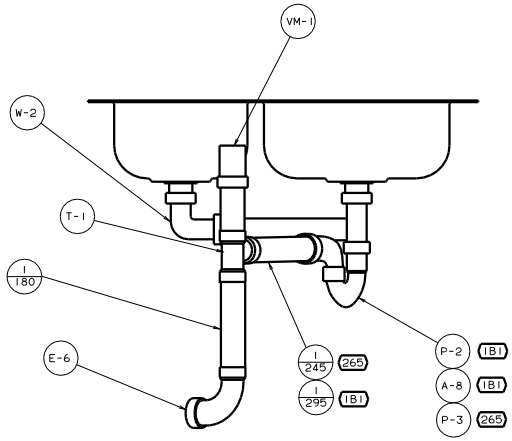

VIEW A-A

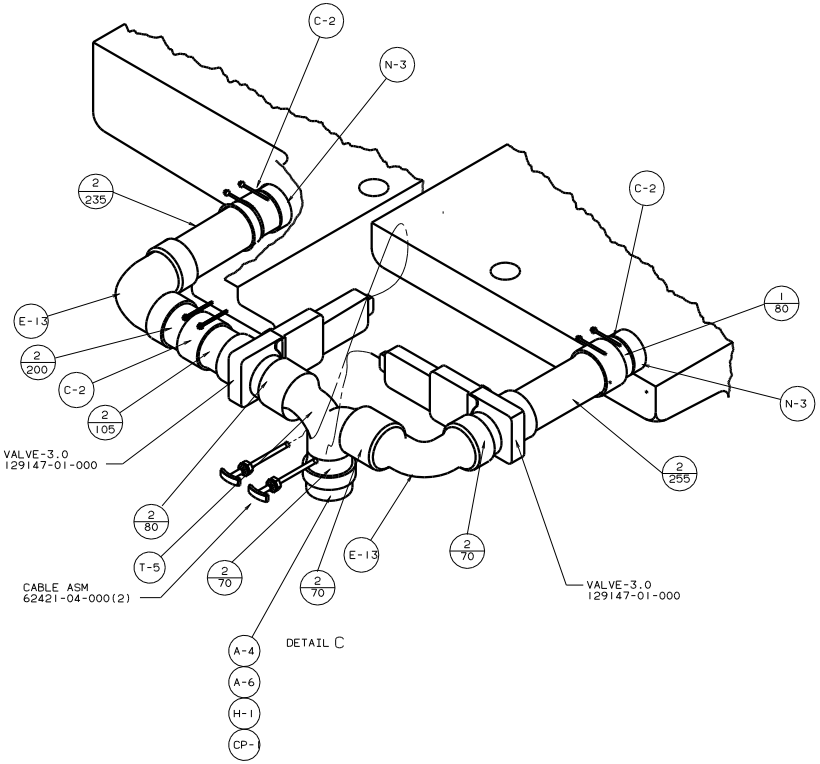

DETAIL C

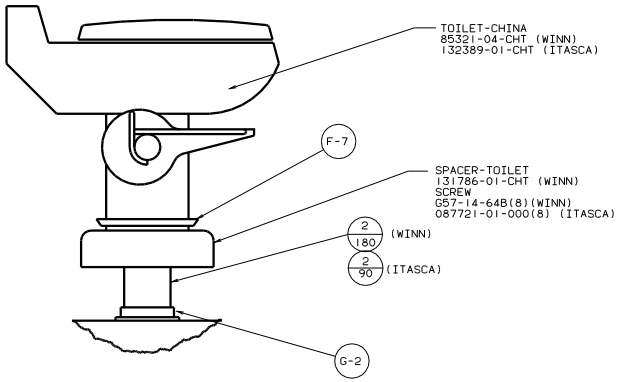

VIEW B-B

00 G37G

TITLE: DRAINAGE SYSTEM INSTL

DO NOT SCALE DRAWING | SIZE Ie | DWG NO 132302

SHEET 2 OF 4

Copyright 2005 Winnebago Industries, Inc.

DWG NO 132302

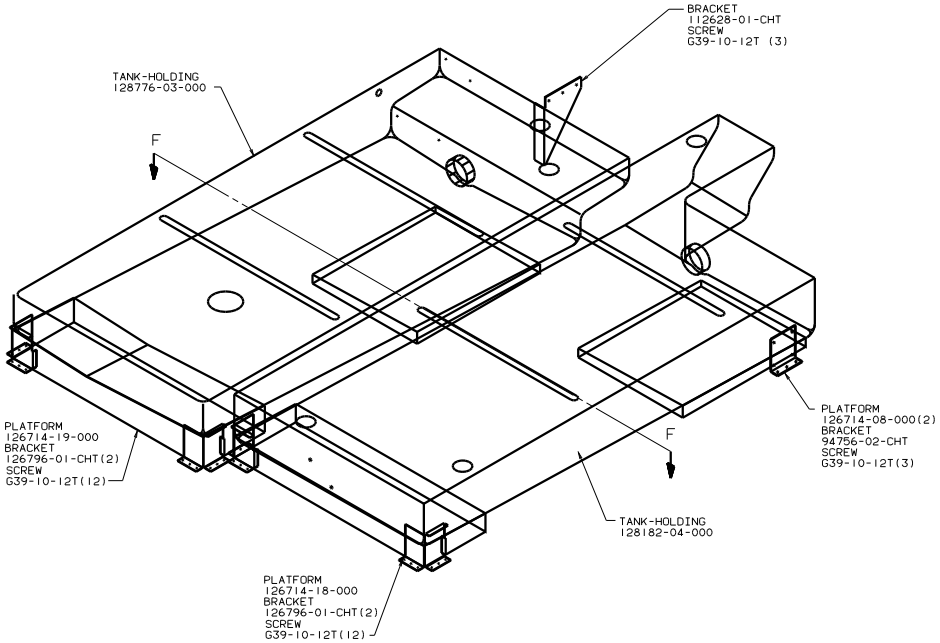

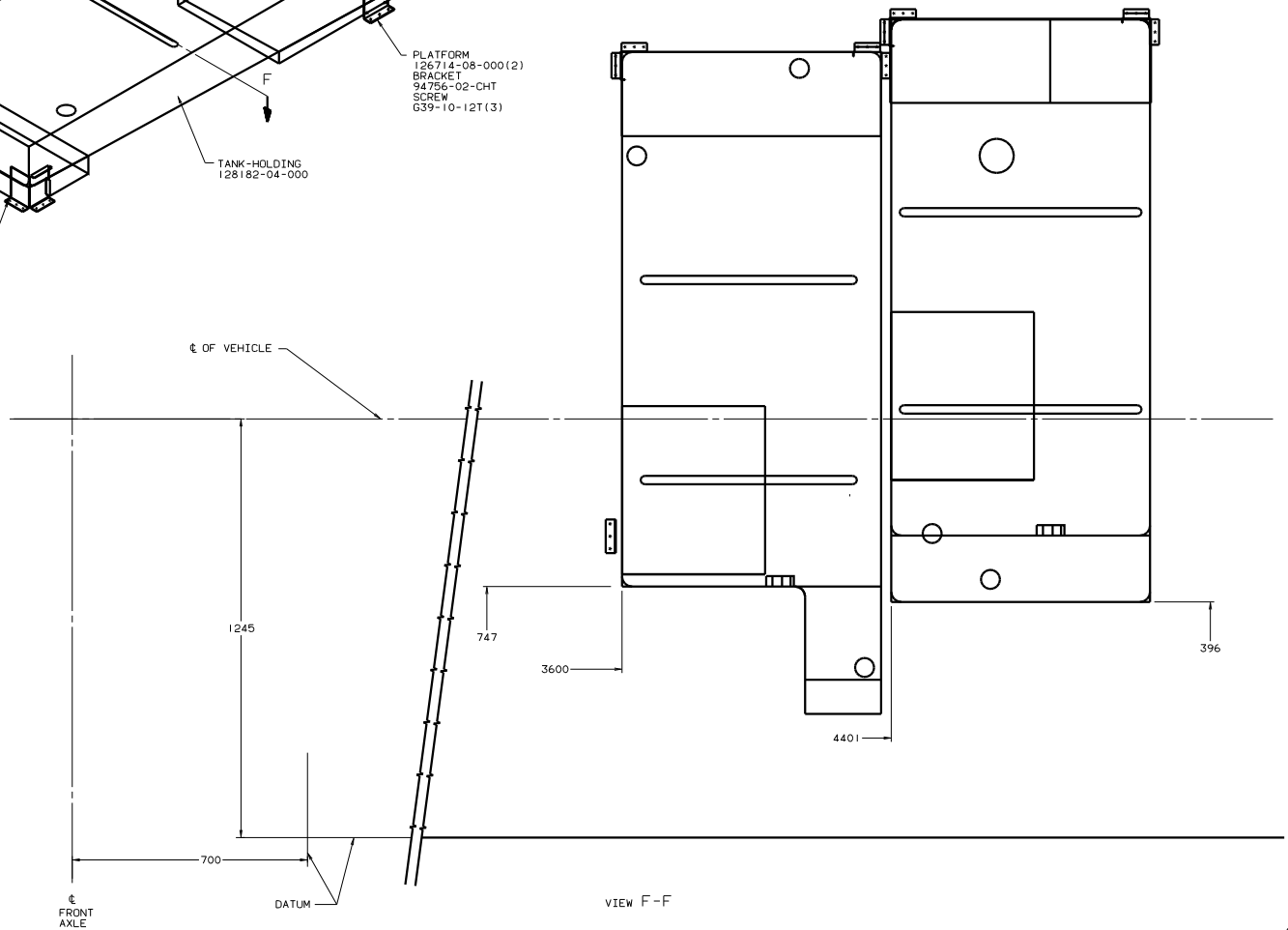

00 G37G

TITLE: DRAINAGE SYSTEM INSTL	
DO NOT SCALE DRAWING	SIZE Ie
SHEET 3 OF 4	DWG NO 132302

Copyright 2005 Winnebago Industries, Inc.

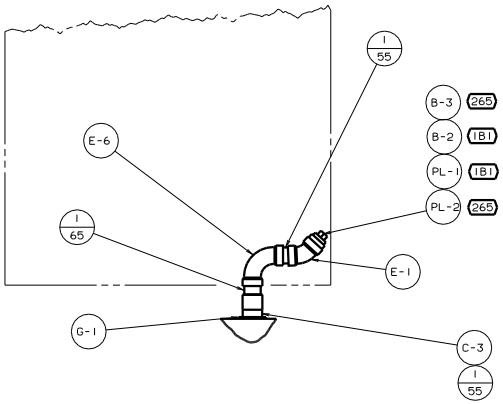

VIEW D-D
WASHER/DRYER WITHOUT
21T

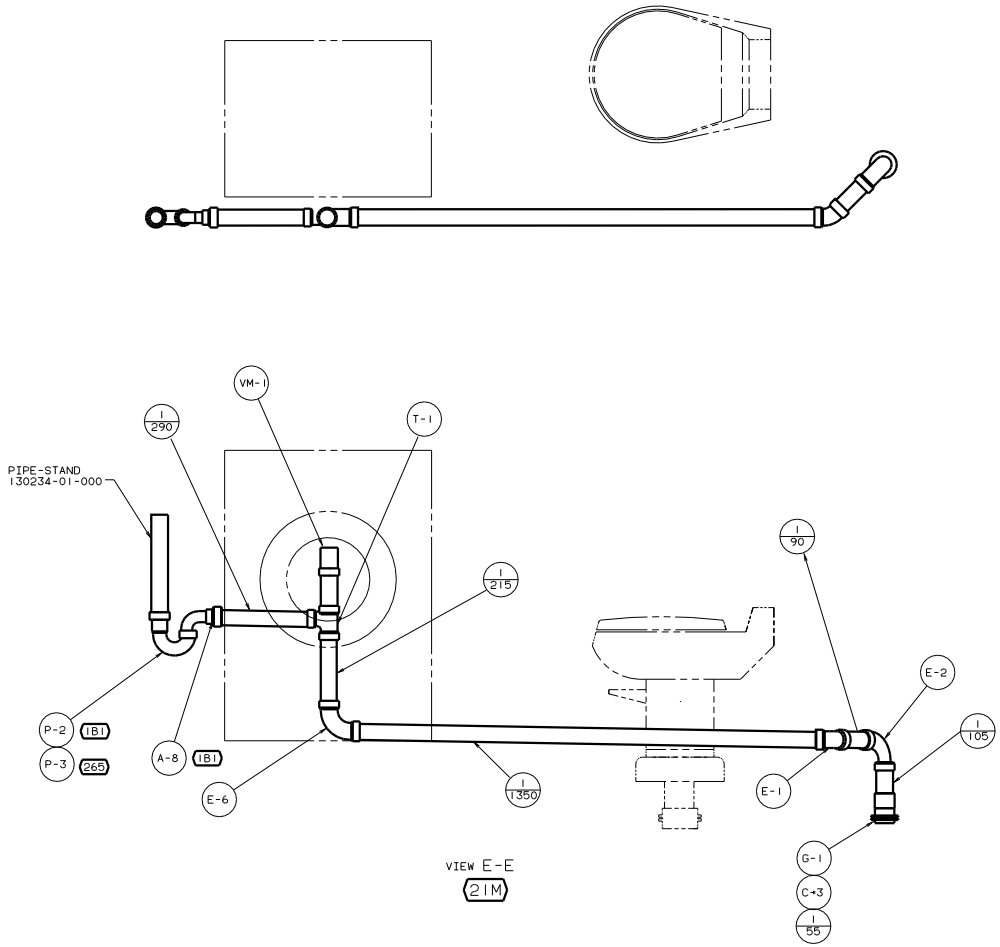

VIEW E-E
21M

00 G37G

TITLE: DRAINAGE SYSTEM INSTL	
DO NOT SCALE DRAWING	SIZE I	DWG NO 132302
SHEET 4 OF 4		

Copyright 2005 Winnebago Industries, Inc.

RELEASE	REV A	DATE	CP	TH	ADM	DWG NO 132706

REV	ZONE	REVISION RECORD	DATE	CP/TH-ORIG

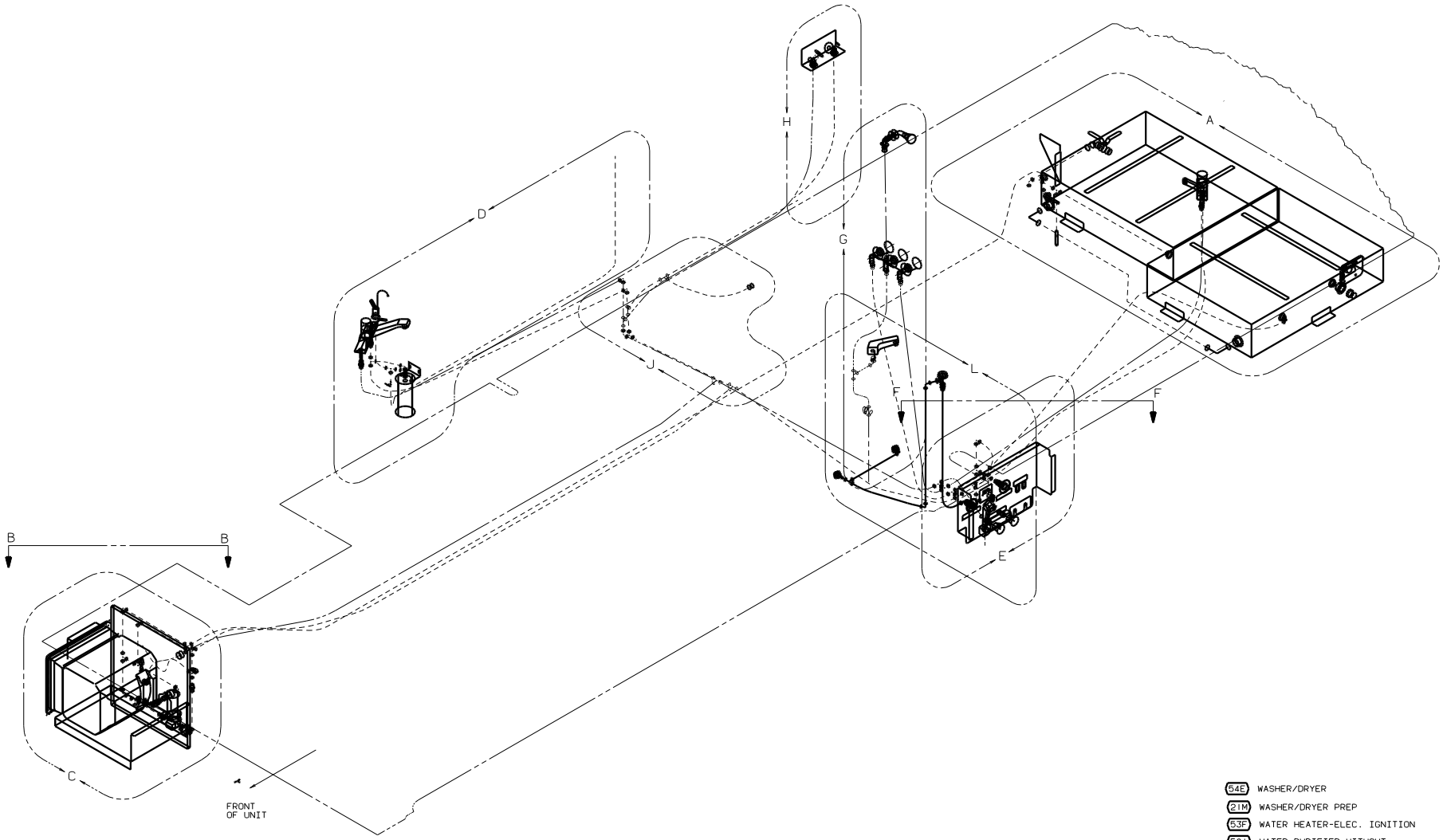

8. ADD TEFLON TAPE 10405-02-000 TO FITTING.
7. USE WITH ITASCA.
6. USE WITH WINNEBAGO.
5. USE DETAIL "K" IN THIS AREA (BOTH ENDS OF TUBING).
4. FLUSHING SYSTEM REQUIRES 125697-06-000 INSTRUCTION SHEET.
3. ALL TUBING TO BE SECURED AT 1200 INTERVALS MAX WITH CLAMP 10495-01-000 OR CLIP 91951-01-000 AND SCREW G67-10-12B.
2. TUBING TO BE INSTALLED WITH SUFFICIENT SLOPE TO PROVIDE DRAINAGE TO THE NEAREST VALVE.
1. PLASTIC FITTINGS TO BE SEALED WITH SEALANT 84456-01-000.

NOTES:

X-X	FOR WATER CALLOUTS SEE DWG NO. 116230-01-000

54E WASHER/DRYER
21M WASHER/DRYER PREP
53F WATER HEATER-ELEC. IGNITION
501 WATER PURIFIER WITHOUT
29B WATER PURIFIER
15U REFRIGERATOR/FRZR W/ICEMAKER
1B2 WTR HTR-10GAL/ELEC/LP/MTRAID

LEGEND	
HOT	
COLD	

WINNEBAGO 00 G37G

DFTR	DATE	UNSPECIFIED TOLERANCES ARE:
CHKR	DATE	WHOLE DIM (X) ± 7
P E	DATE	ONE-PLACE (X.X) ±
M E	DATE	TWO-PLACE (X.XX) ±
DSNR	DATE	ANGLE ±
		THIRD ANGLE PROJECTION

MATERIAL:

LAYOUT NO 00AG37G TITLE: WATER SYSTEM INSTL

DIA Ø | SCALE: NONE | DO NOT SCALE DRAWING | SIZE Ie | DWG NO 132706

ALL DIMENSIONS ARE IN MILLIMETERS | SHEET 1 OF 4

REF: 132697 A1

Copyright 2005 Winnebago Industries, Inc.

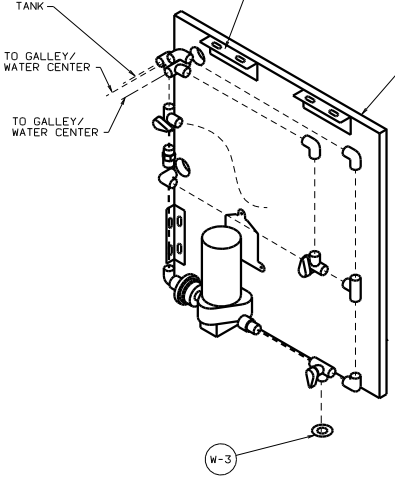

VIEW B-B

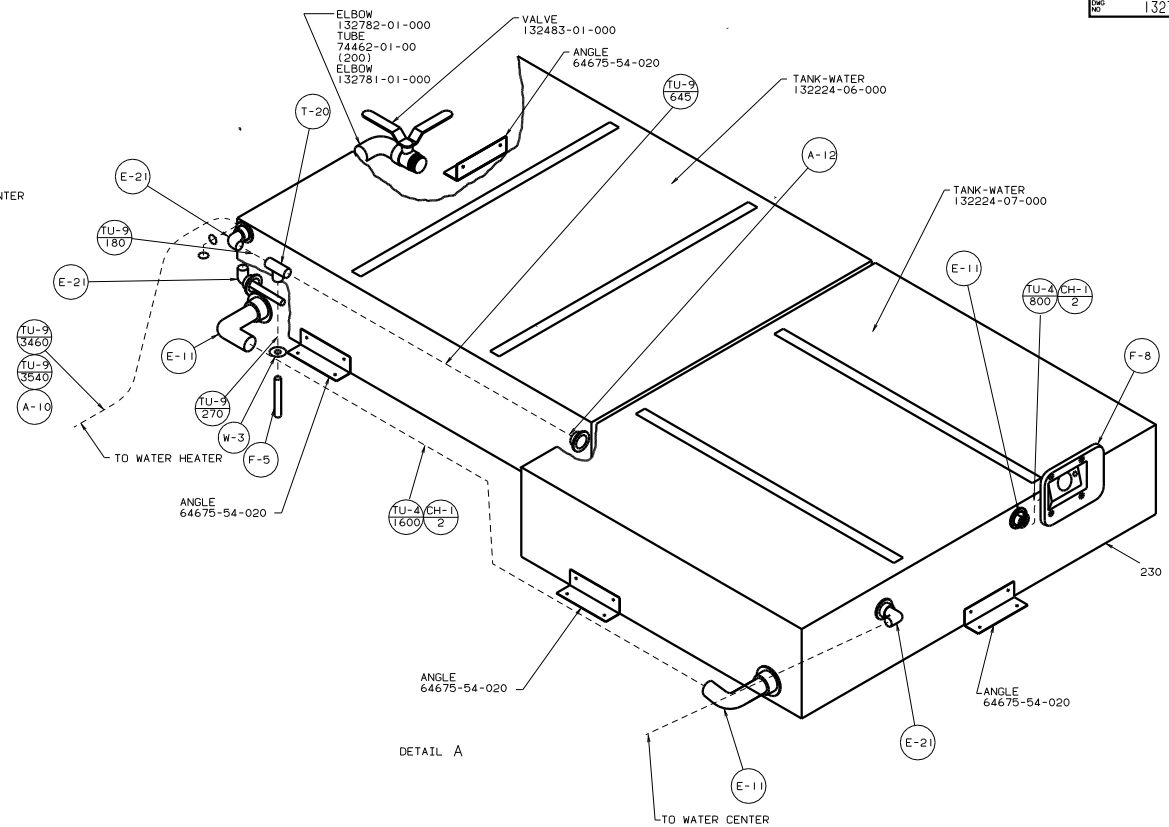

DETAIL A

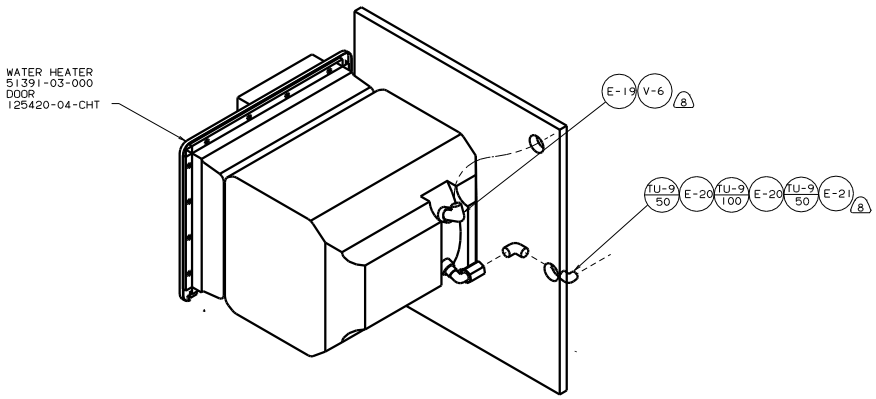

DETAIL C 53F

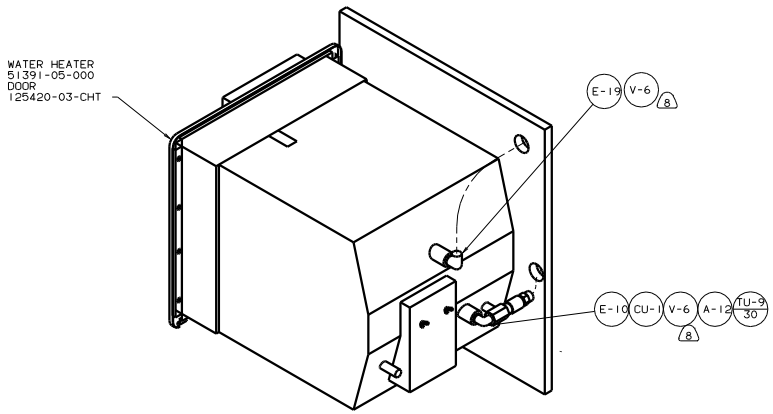

DETAIL C 1B2

00 G37G

TITLE: WATER SYSTEM INSTL

DO NOT SCALE DRAWING | SIZE E | DWG NO 132706

SHEET 2 OF 4

Copyright 2005 Winnebago Industries, Inc.

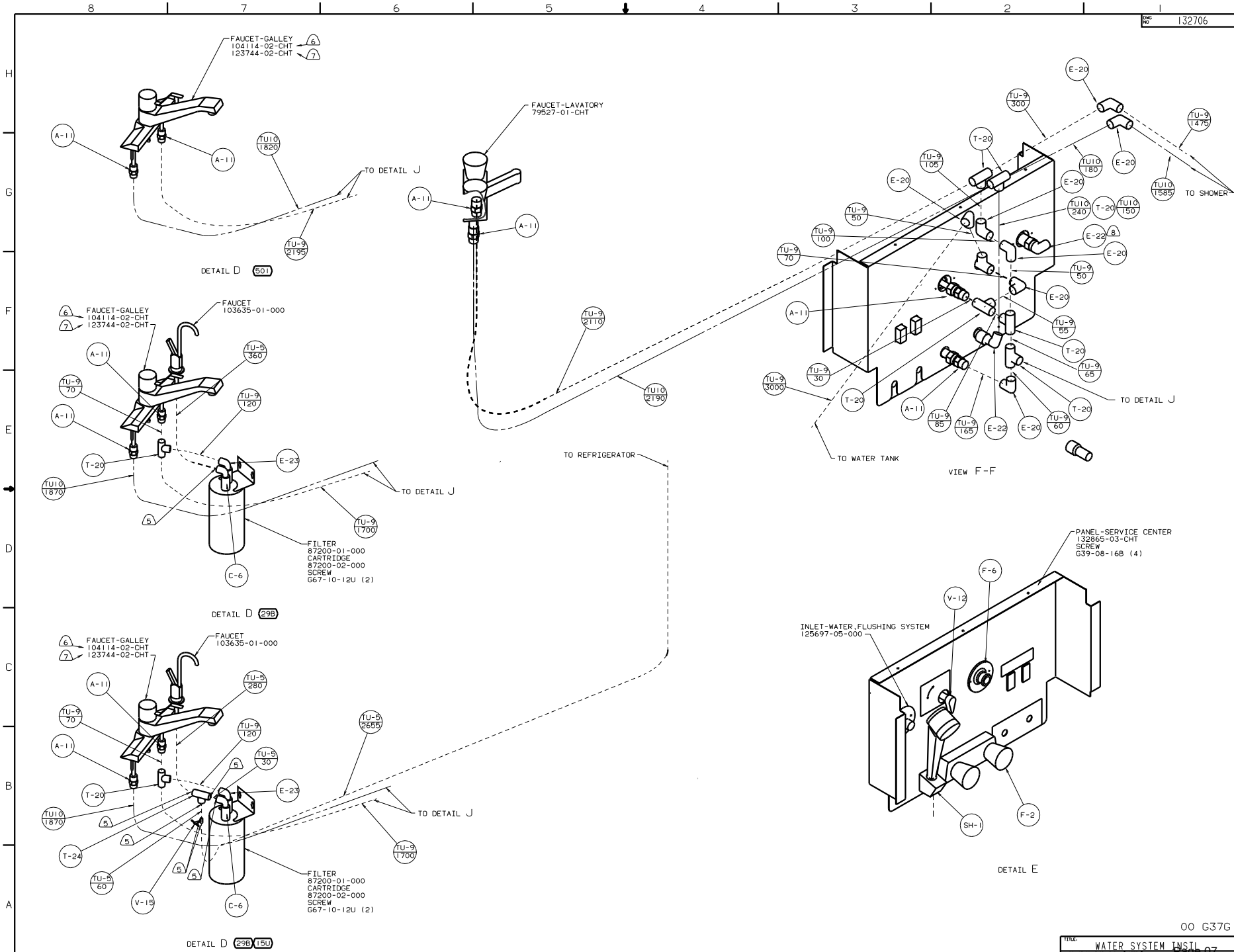

Copyright 2005 Winnebago Industries, Inc.

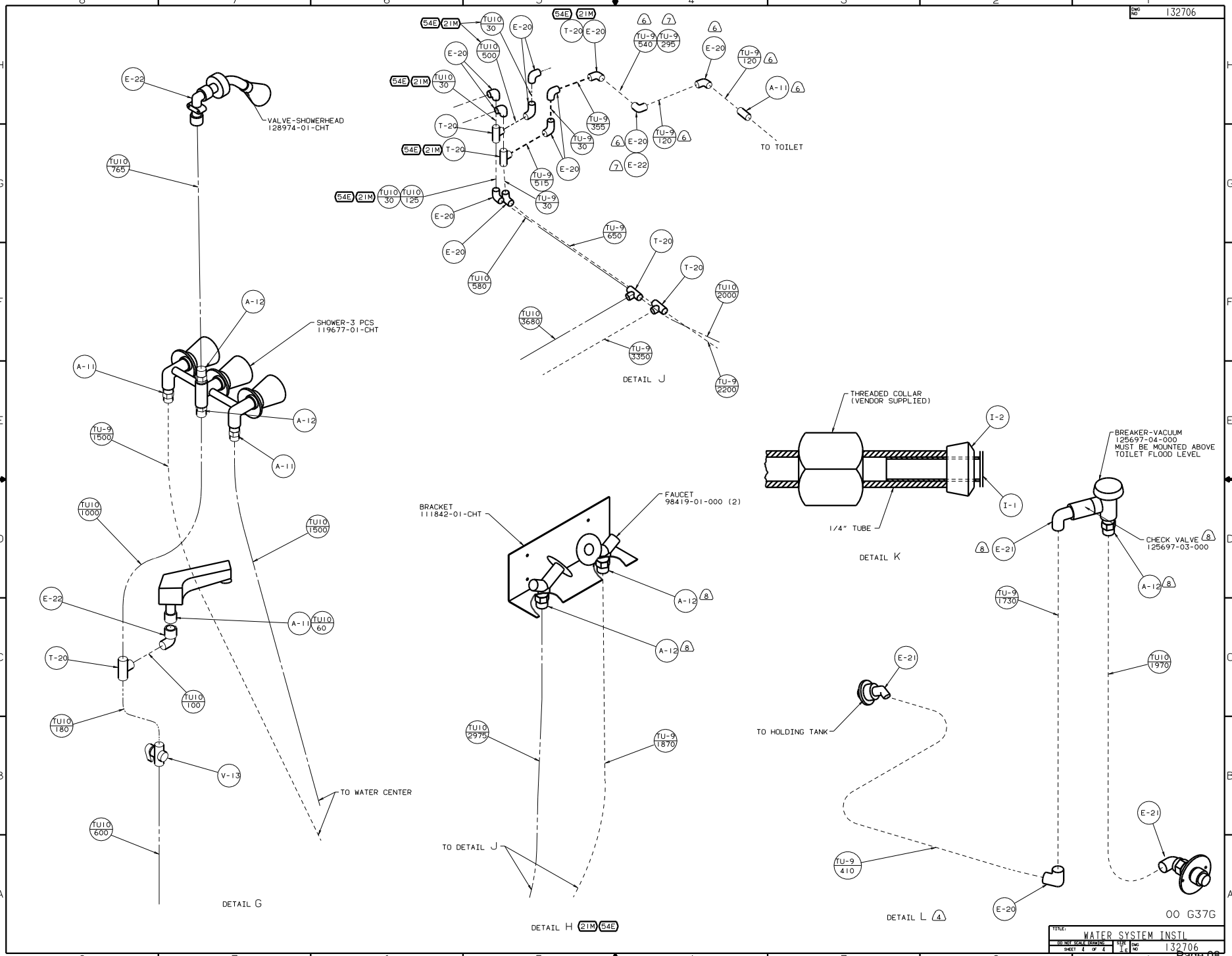

Copyright 2005 Winnebago Industries, Inc.