RELEASE	REV A	DATE	DFTR	ADM	DWG NO 121982

REV	ZONE	REVISION RECORD	DATE	DFTR-ORIG

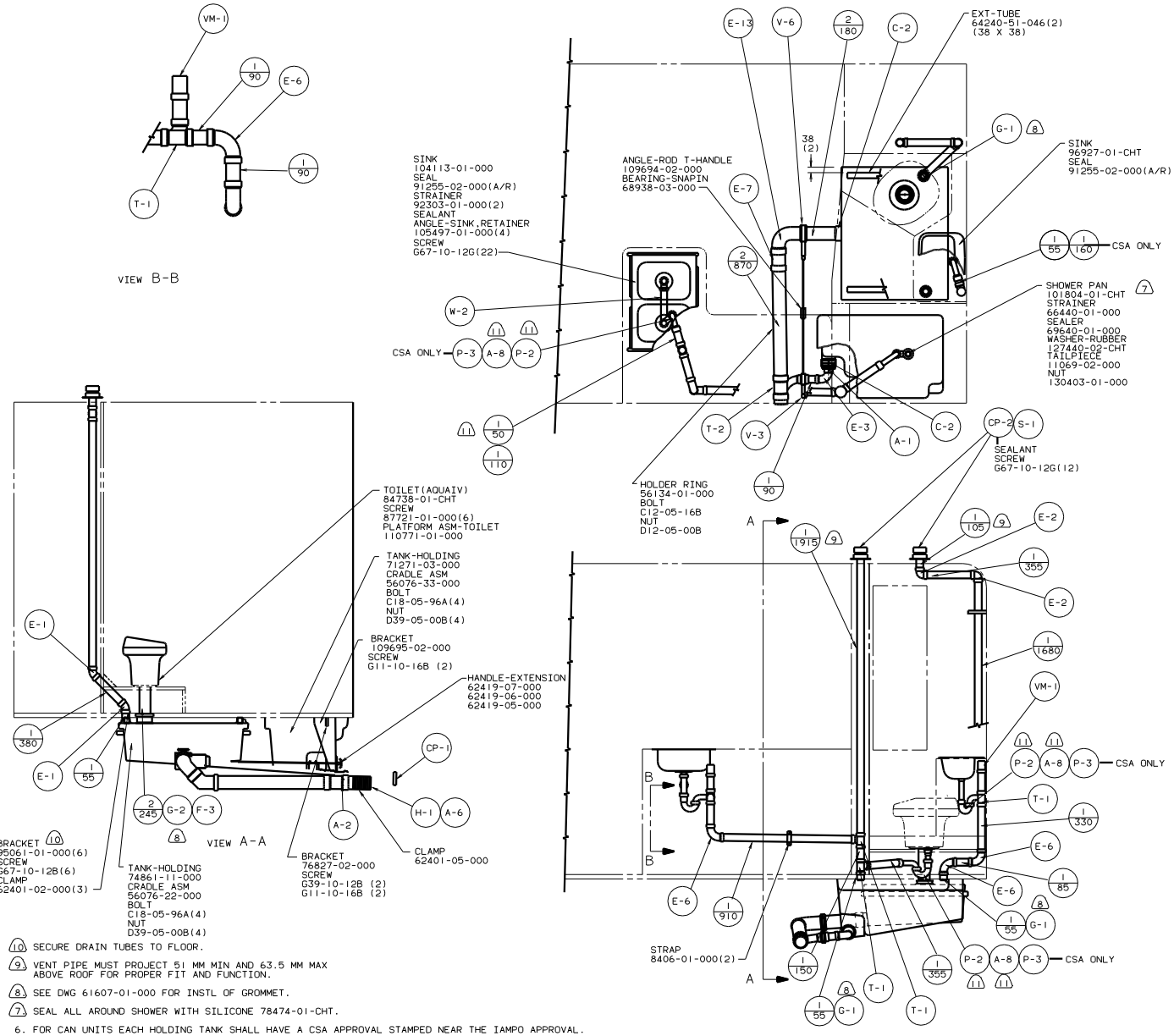

10 SECURE DRAIN TUBES TO FLOOR.

9 VENT PIPE MUST PROJECT 51 MM MIN AND 63.5 MM MAX ABOVE ROOF FOR PROPER FIT AND FUNCTION.

8 SEE DWG 61607-01-000 FOR INSTL OF GROMMET.

7 SEAL ALL AROUND SHOWER WITH SILICONE 78474-01-CHT.

6. FOR CAN UNITS EACH HOLDING TANK SHALL HAVE A CSA APPROVAL STAMPED NEAR THE IAMPO APPROVAL.

5. EXPOSED PIPE ABOVE ROOF TO BE PAINTED 37163-01-000.

4. ALL EXTERIOR OPENINGS AROUND PIPE TO BE SEALED WITH 110744-01-000.

3. ALL PIPE AND FITTINGS TO BE ASSEMBLED WITH SOLVENT 4020-01-000.

2. SLOPE OF TRAP ARM MUST BE 6 PER 305.

1. SLOPE OF HORIZONTAL PIPING TO BE 6 PER 305 MIN.

NOTES:

12 SECURE PIPES TO CABINET USING WIRE TIE 108046-02-000 AND SCREW G67-10-12U (8).

11 NOT USED ON CANADIANS.

X-X FOR DRAINAGE CALLOUTS SEE DWG NO. 116229-01-000

WINNEBAGO		97 321RB	
DFTR	DATE	UNSPECIFIED TOLERANCES ARE: WHOLE DIM (X) ± 1.5; ONE-PLACE (X.X) ±; TWO-PLACE (X.XX) ±; ANGLE ±	MATERIAL:
CHKR	DATE		
P E	DATE		
M E	DATE		
DSNR	DATE	THIRD ANGLE PROJECTION	
LAYOUT NO. - - - - - -		TITLE: DRAINAGE SYSTEM INSTL	
DIA Ø	SCALE: 0.1	DO NOT SCALE DRAWING	SIZE I	DWG NO 121982
ALL DIMENSIONS ARE IN MILLIMETERS		SHEET OF		

REF: 110931 K

Copyright 2005 Winnebago Industries, Inc.

DWG NO	---
129911-01	W,I
129911-02	------

RELEASE A — 129911

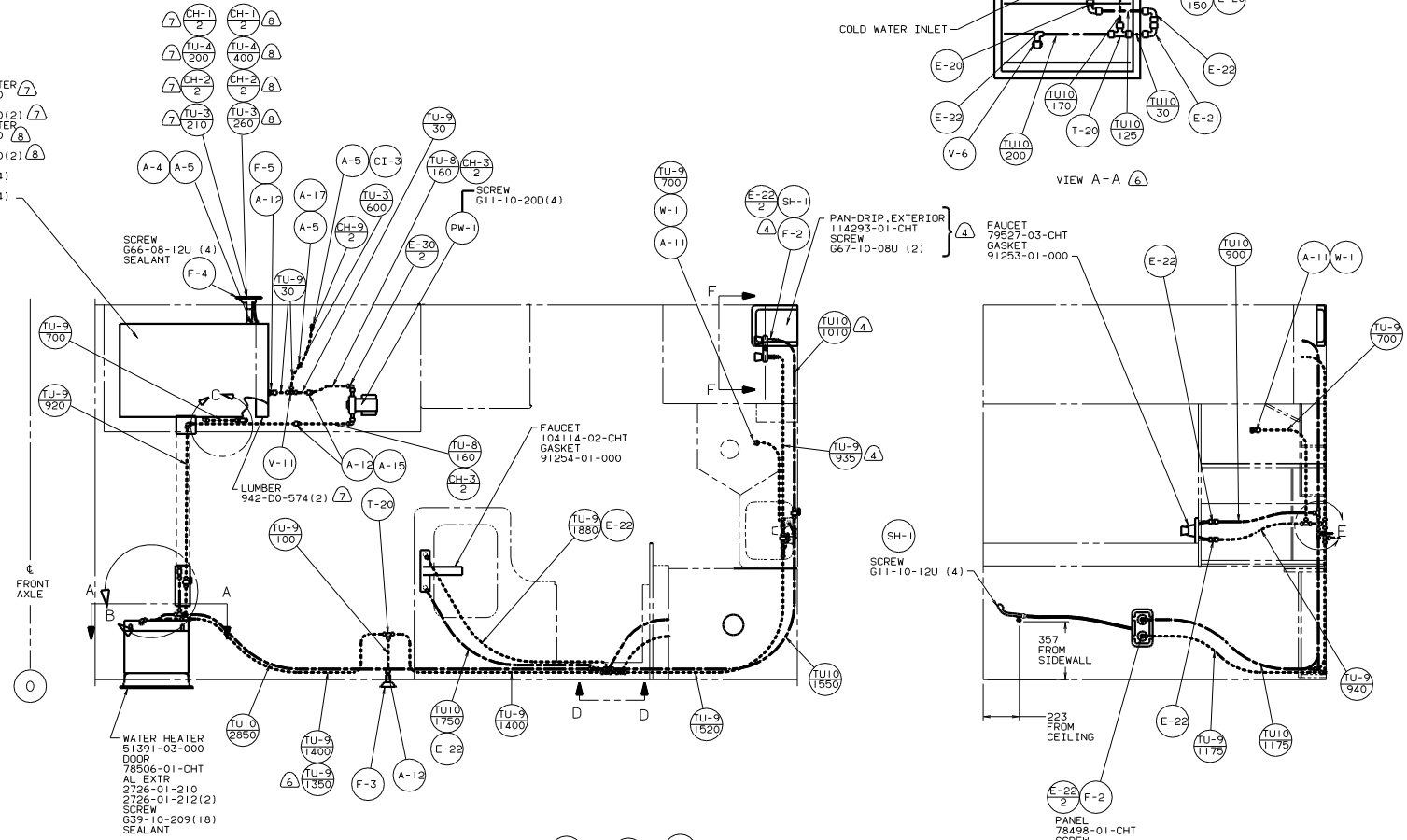

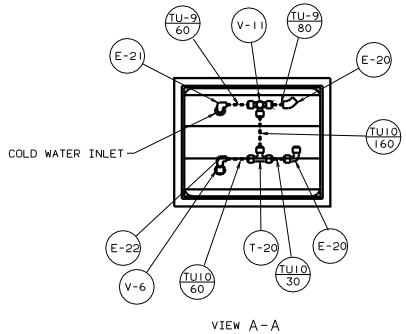

(9) 76C ENTERTAINMENT CTR-EXT.

(8) NOT USED WITH 04L JAPAN EXPORT PACKAGE.

(7) 04L JAPAN EXPORT PACKAGE.

(6) 04L JAPAN EXPORT PACKAGE & 611 EXPORT RR AUTO HTR/MOTORAID.

(5) NOT USED WITH 64R EXTERIOR WASH STATION.

(4) 64R EXTERIOR WASH STATION.

3. ALL TUBING TO BE SECURED AT 1200 INTERVALS MAXIMUM WITH CLAMP 10495-01-000 AND SCREW G67-10-12B.

2. TUBING TO BE INSTALLED WITH SUFFICIENT SLOPE TO PROVIDE DRAINAGE TO NEAREST VALVE.

1. PLASTIC FITTINGS TO BE SEALED WITH SEALANT 84456-01-000.

NOTES:

X-X	FOR WATER CALLOUTS SEE DWG NO. 116230-01-000

LEGEND	
HOT	
COLD	

WINNEBAGO — 99 322R

DRTR DATE
CHKR DATE
P E DATE
M E DATE
DGNR DATE

UNSPECIFIED TOLERANCES ARE: WHOLE DIM (X) ±7; ONE-PLACE (X.X) ±; TWO-PLACE (X.XX) ±; ANGLE ±; THIRD ANGLE PROJECTION

MATERIAL:

LAYOUT NO 421RB4 — TITLE: WATER SYSTEM INSTL

DIA Ø — SCALE: NONE — DO NOT SCALE DRAWING — SIZE I — DWG NO 129911

ALL DIMENSIONS ARE IN MILLIMETERS — SHEET 1 OF 2

Copyright 2005 Winnebago Industries, Inc.

REF: 124370 K 1

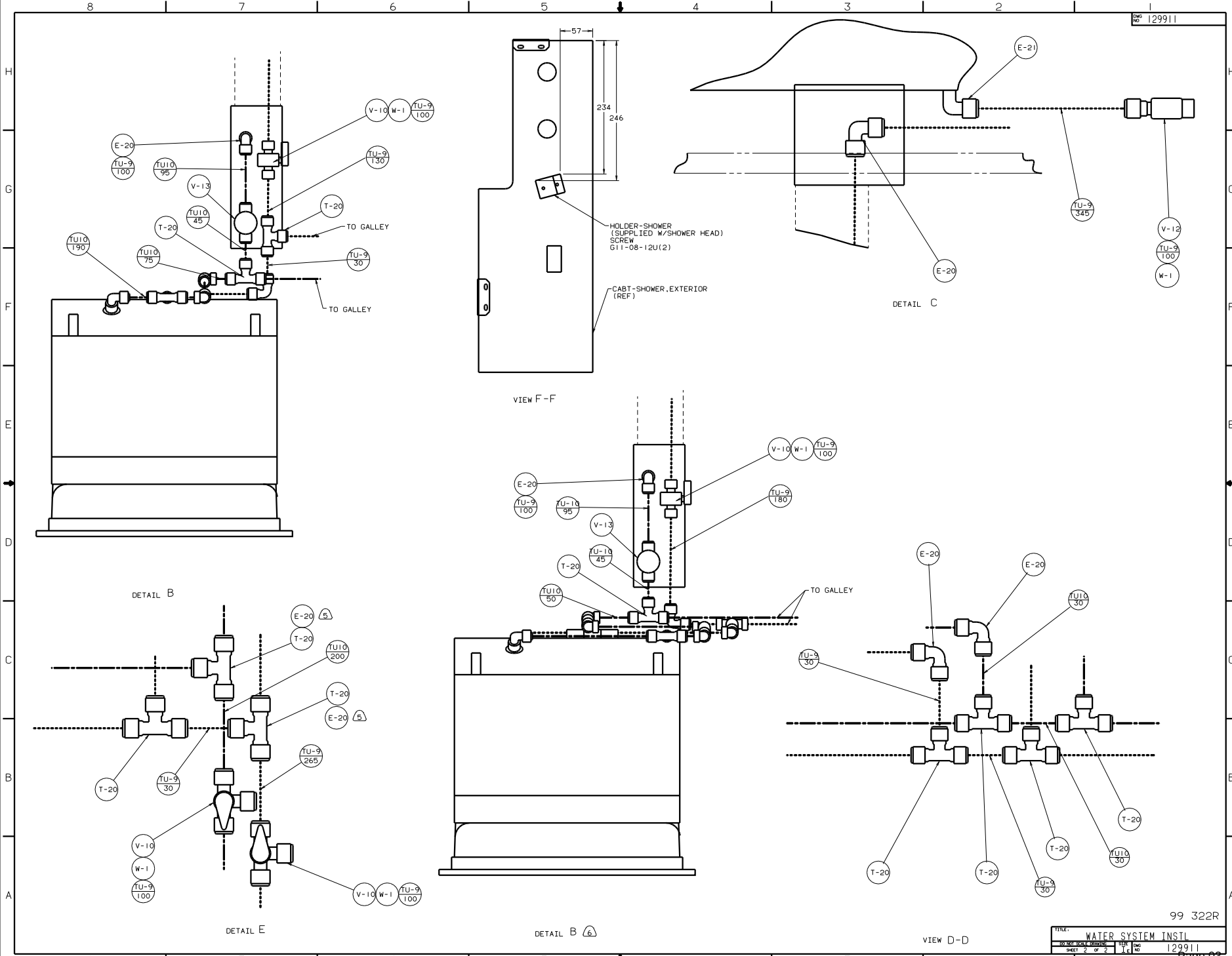

Copyright 2005 Winnebago Industries, Inc.